CITY CHARCOAL 420
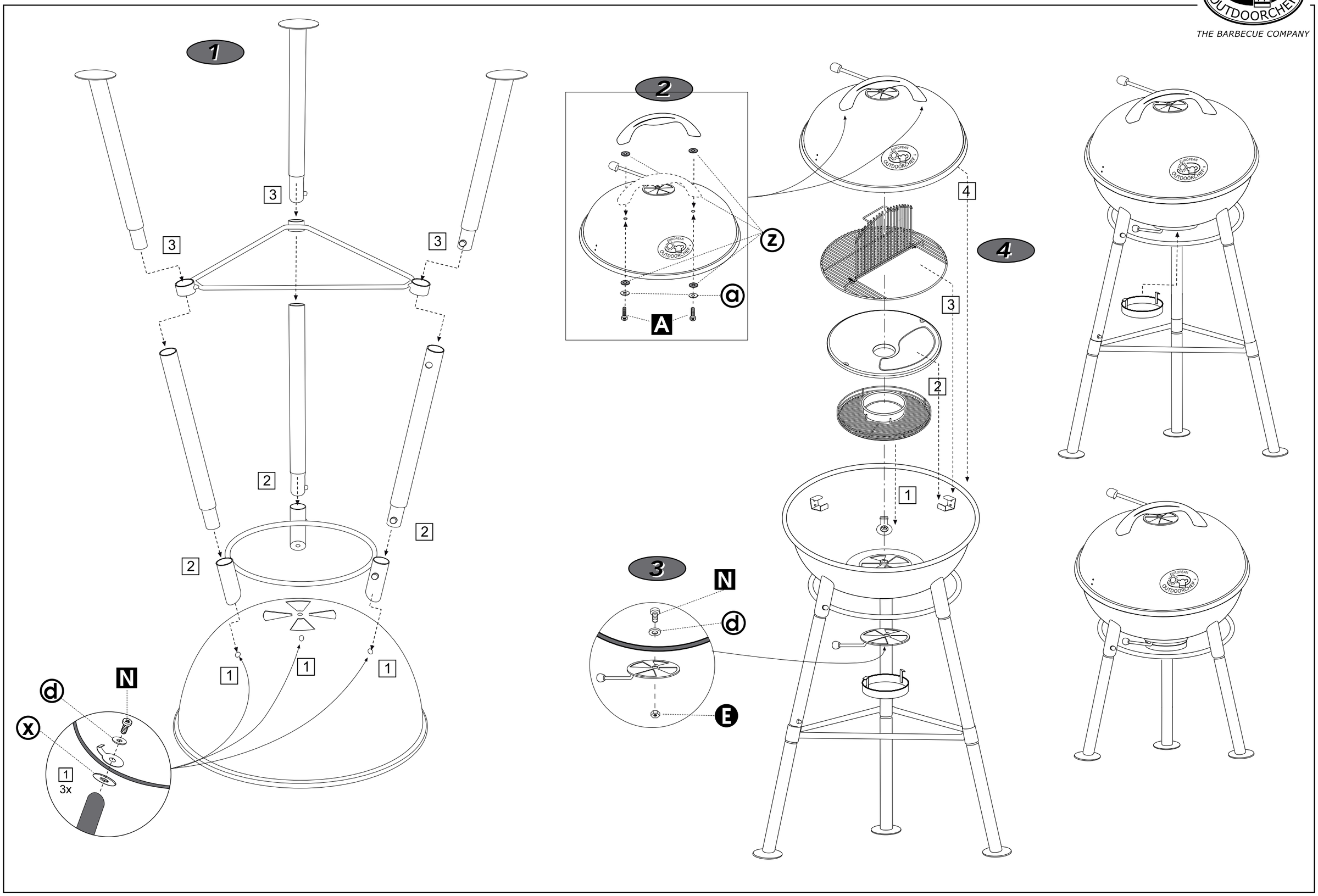
EUROPEAN OUTDOORCHEF™
THE BARBECUE COMPANY